01_Revision_History.SchDoc

Index

Page	Schematics Page Name
01	Cover Sheet / Revision History
02	Top Level
03	
04	
05	
06	
07	
08	
09	
10	

Revision History

Rev.	Rel.	Date	Author	Description	Page(s)
1.1.1	RC00	2015-03	GW	- Initial design	
3.0	RC00	2021-02	GF	- VSON A32 footprint	

TLE4972_1ph_carrier_pcb

Default_Assembly

3.0

Infineon Technologies AG

IFAT DC ATV SC MSS TM

Siemensstraße 2, 9500 Villach, Austria

02/2021

Link to Top Level Document

02 Top Level
02_Top_Level.SchDoc

LEGAL DISCLAIMER
THE INFORMATION GIVEN IN THIS DOCUMENT IS GIVEN FOR ILLUSTRATING PURPOSES ONLY. THE RECIPIENT OF THIS DOCUMENT MUST VERIFY ANY FUNCTION DESCRIBED HEREIN IN THE REAL APPLICATION. INFINEON TECHNOLOGIES HEREBY DISCLAIMS ANY AND ALL WARRANTIES AND LIABILITIES OF ANY KIND (INCLUDING WITHOUT LIMITATIO N WARRANTIES OF NON-INFRINGEMENT OF INTELLECTUAL PROPERTY RIGHTS OF ANY THIRD PARTY) WITH RESPECT TO ANY AND ALL INFORMATION GIVEN IN THIS DOCUMENT.

Infineon Technologies AG
IFAT DC ATV SC MSS TM
Siemensstraße 2, 9500 Villach, Austria

Title	TLE4972_1ph_carrier_pcb		
Variant	Default_Assembly	Approved	<Appr.>
Size: A3	Document Name: 01_Revision_History.SchDoc	Rel.	Rev. 3.0
Date: 11.03.2021	Time: 15:52:43	Author: GF	Sheet of 3

© Infineon Technologies AG 2021. All Rights Reserved.

02_Top_Level.SchDoc

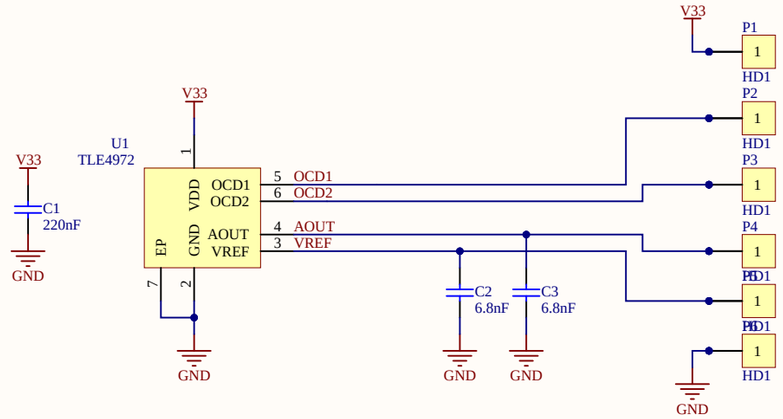

Link to Miscellaneous Document

Miscellaneous
Miscellaneous.SchDoc

Infineon Technologies AG
IFAT DC ATV SC MSS TM
Siemensstraße 2, 9500 Villach, Austria

Title	TLE4972_1ph_carrier_pcb		
Variant	Default_Assembly	Approved	<Appr.>
Size: A3	Document Name: 02_Top_Level.SchDoc	Rel.	Rev. 3.0
Date: 11.03.2021	Time: 15:52:43	Author: GF	Sheet of 3

© Infineon Technologies AG 2021. All Rights Reserved.

Miscellaneous.SchDoc

BOM Report Configuration



Note!
This component is used to define BOM report configuration.
If this component is deleted before other components from database are placed in this project, the BOM report configuration gets lost!

Infineon Technologies AG
IFAT DC ATV SC MSS TM
Siemensstraße 2, 9500 Villach, Austria

Title	TLE4972_1ph_carrier_pcb		
Variant	Default_Assembly	Approved	<Appr.>
Size: A3	Document Name: Miscellaneous.SchDoc	Rel.	Rev. 3.0
Date: 11.03.2021	Time: 15:52:43	Author: GF	Sheet of 3

© Infineon Technologies AG 2021. All Rights Reserved.

© Infineon Technologies AG 2021. All Rights Reserved.

Infineon Technologies AG
IFAT DC ATV SC MSS TM
Am Campeon 1-12
85579 NEUBIBERG – GERMANY

ENGINEER:	TITLE: TLE4972_1ph_carrier_pcb
PCB DESIGNER: GW	
DATE: 11.03.2021	PART NO.:
SVN REVISION: Not In VersionControl	FILE NAME: TLE4972_1ph_carrier_pcb.PcbDoc
REV: <Rev.>	REL: <Rel.>
SCALE: 1:1	APRV: <Appr.>

© Infineon Technologies AG 2021. All Rights Reserved.

Infineon Technologies AG
IFAT DC ATV SC MSS TM
Am Campeon 1-12
85579 NEUBIBERG – GERMANY

ENGINEER:	TITLE: TLE4972_1ph_carrier_pcb
PCB DESIGNER: WS	
DATE: 11.03.2021	PART NO.:
SVN REVISION: Not In VersionControl	FILE NAME: TLE4972_1ph_carrier_pcb.PcbDoc
REV: <Rev.>	REL: <Rel.>
SCALE: 1:1	APRV: <Appr.>



Infineon Technologies AG
IFAT DC ATV SC MSS TM
Am Campeon 1-12
85579 NEUBIBERG – GERMANY

ENGINEER:		TITLE: TLE4972_1ph_carrier_pcb	
PCB DESIGNER: GW			
DATE: 11.03.2021	PART NO.:	REL: <Rel.>	REV: <Rev.>
SVN REVISION: Not In VersionControl	FILE NAME: TLE4972_1ph_carrier_pcb.PcbDoc	APRV: <Appr.>	SCALE: 1:1

© Infineon Technologies AG 2021. All Rights Reserved.



© Infineon Technologies AC 2021. All Rights Reserved.

Infineon Technologies AC IFAT DC ATV SC MSS TM Am Campeon 1-12 85579 NEUBIBERG – GERMANY	SVN REVISION: Not In VersionControl	FILE NAME: TLE4972_1ph_carrier_pcb.PcbDoc	APPV: <Appr.>
	DATE: 11.03.2021	PART NO.:	REL: <Rel.>
	PCB DESIGNER: CW	TITLE: TLE4972_1ph_carrier_pcb	REV: <Rev.>
	ENGINEER:		SCALE: 1:1



Infineon Technologies AG
IFAT DC ATV SC MSS TM
Am Campeon 1-12
85579 NEUBIBERG - GERMANY

ENGINEER:		TITLE: TLE4972_1ph_carrier_pcb	
PCB DESIGNER: GW			
DATE: 11.03.2021	PART NO.:	REL: <Rel.>	REV: <Rev.>
SVN REVISION: Not In VersionControl	FILE NAME: TLE4972_1ph_carrier_pcb.PcbDoc	APRV: <Appr.>	SCALE: 1:1

© © Infineon Technologies AG 2021. All Rights Reserved.



© Intineon Technologies AC 2021. All Rights Reserved.

Intineon Technologies AC IFAT DC ATV SC MSS TM Am Campeon 1-12 85579 NEUBIBERG - GERMANY	SVN REVISION: Not In VersionControl	FILE NAME: TLE4972_1ph_carrier_pcb.PcbDoc	APPV: <Appr.>	SCALE: 1:1
	DATE: 11.03.2021	PART NO.:	REL: <Rel.>	REV: <Rev.>
	PCB DESIGNER: CW	TITLE: TLE4972_1ph_carrier_pcb		
	ENGINEER:			

